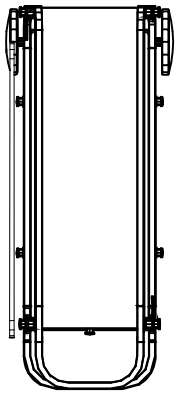

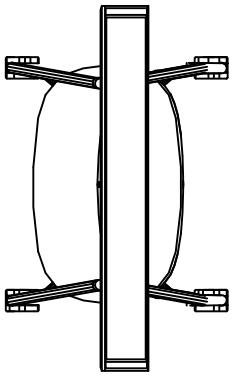

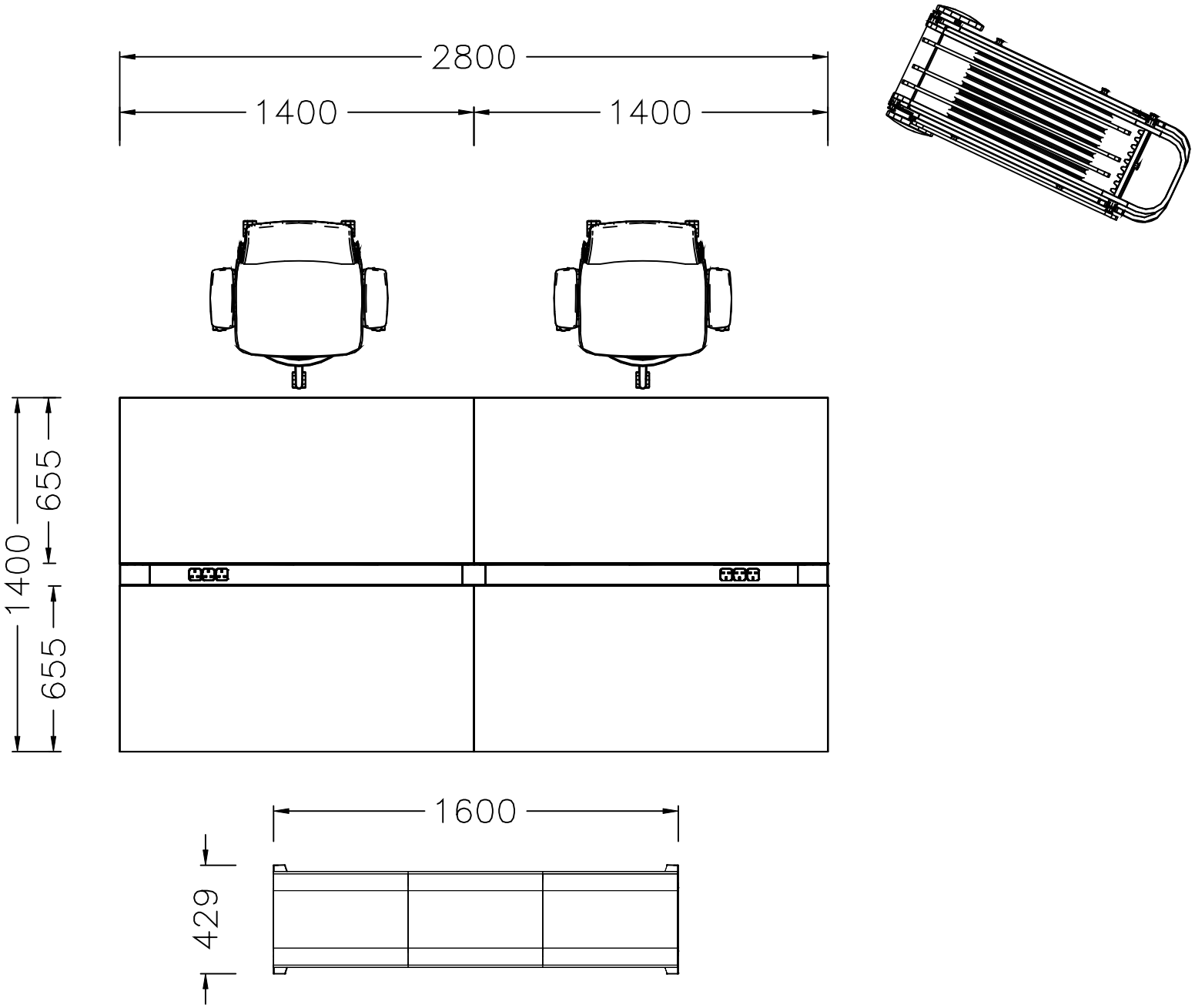
2800
1400
1400
1400
655
655
1600
429