Steelcase

Product Info

Back to Menu

December 2022

Steelcase Privacy Screens

Availability

Electronic price list updated with release 200.D (U.S.) and 156.D (Canada), dated December 19, 2022.

All specifications subject to change without notice. Reference the electronic catalog/Hedberg for current pricing.

Tip: Steelcase Marketing Resources is a new global platform for ordering Steelcase marketing materials that replaces Adstock.

View or download Steelcase Specification Guides at *https://steelcase.s4mrc.com/na/spec-guides/individual-spec-guides?limit=30&p=1*

Transitional products in this specification guide are **maintained for existing customers only** and are likely to be phased out over time. These products are indicated with a T. Products that are scheduled to be culled are indicated with an X, followed by the last order entry date.

Surface Materials

The surface materials team has announced the launch of the Finish Library, found at *https://finishlibrary.steelcase.com/*.

▶For a list of all trademarks, refer to the last page of this specification guide. © 2022 Steelcase Inc.

Working with This Specification Guide

Additional Resources 2

Product Details

Clipper 3

Pivot 9

Steelcase Work Tents 13

Specifying

Clipper 22

Pivot 23

Steelcase Work Tents 24

Surface Materials 29

Resources 37

For Canadian Pricing
Canadian factor can be found at www.steelcase.com/CADpricing.
Calculate in the following order to avoid rounding errors:

- Multiply the base price and each option by the Canadian factor.
- Round each to the nearest dollar.
- Add base and options for total list price.

Additional Resources

Privacy screen products are supported with informational materials, tools, and software to help you plan, specify, and order an installation efficiently.

Printed Materials

Other Specification Guides
Steelcase offers a comprehensive portfolio of furniture and solutions. For the full offering of products, refer to the individual product specification guides. These can be accessed at the www.steelcase.com web site or at village.steelcase.com

Computer Tools

Electronic Catalog
Accurate sales quotations and purchase orders for Steelcase products are created with specification software that uses Steelcase Electronic Catalog data. Use the data to specify and price style numbers and options for every Steelcase product. The data is updated bimonthly by Steelcase and provided to software programs including: the Hedberg Business System, SmartTools–Steelcase's design and specification software (for more information on SmartTools, please email SmartTools@steelcase.com), the ProjectMatrix Project Symbols libraries, as well as 20-20 CAP Studio.

Furniture Symbol Graphic Data
Steelcase creates 2D and 3D furniture symbols (with attributes) for planning and initially specifying Steelcase products. This data is incorporated into several add-on software packages that work in either a Microstation or an AutoCAD drafting environment.

Digital Publications
You can access these digital publications at www.steelcase.com or village.steelcase.com.

Support

Steelcase Capabilities
Steelcase products are distributed, installed, and serviced through a network of more than 600 dealers worldwide. Steelcase is also represented with offices and corporate showrooms in 26 U.S. cities, 4 Canadian cities, and in France, Germany, Great Britain, and Japan. Every Steelcase product meets our exceptionally high standards of quality and durability and comes with the Steelcase assurance of excellence in service.

For ordering or product assistance, please call your local dealer, the Steelcase Solutions Resource Team, or the Steelcase Solutions Fulfillment Team at 1.888.STEELCASE (1.888.783.3522) or send an e-mail to lineone@steelcase.com.

Call the Steelcase Solutions Resource Team prior to placing an order, when working on a bid, or when you need information about product applications and specifications.

Call the Steelcase Solutions Fulfillment Team if you have submitted an order to Steelcase and you need to speak to your Solutions Fulfillment Team Representative about the order. Also call if you have any post-shipment quality concerns or service parts questions.

For warranty information, please go to: http://www.steelcase.com/warranty/.

Outside the U.S.A., Canada, Mexico, Puerto Rico, and the U.S. Virgin Islands, call 1.616.247.2500.

For information about Steelcase, the name of your nearest Steelcase dealer, or for product literature, call 1.800.333.9939 or visit our Web site: www.steelcase.com.

Steelcase
December 2022

Turnstone Clipper

Product Details

Thought Starters 4
Clipper 6

Specifying

Clipper 22

Surface Materials 30

Thought Starters

Group Lounge

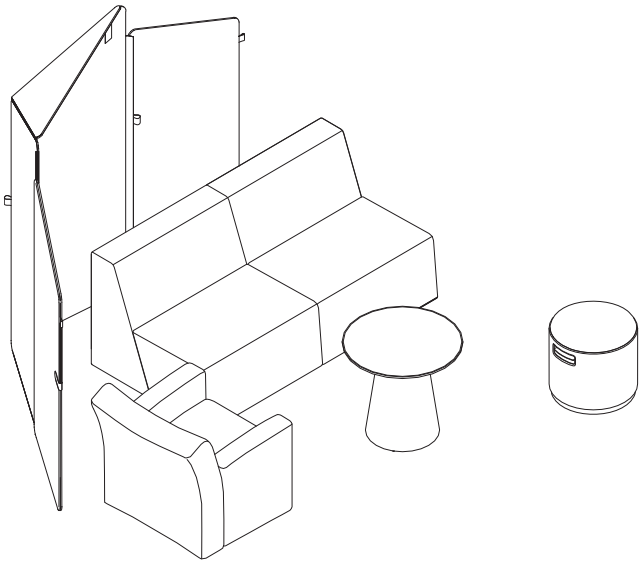

Quantity	Style Number	Description	Options	Page for Ordering
1	**TS6SCRN**	Clipper Screen	56"H with Wings	▶ See page 22
1	**TS3BC**	Big Lounge	–	▶ See *Seating Specification Guide*
1	**TS4TPT**	Paper Table	–	▶ See *Wood Casegoods Specification Guide*
1	**TSBUOY**	Buoy	–	▶ See *Seating Specification Guide*
1	**TS31412**	Jenny Club Low	–	▶ See *Seating Specification Guide*

Touchdown Area

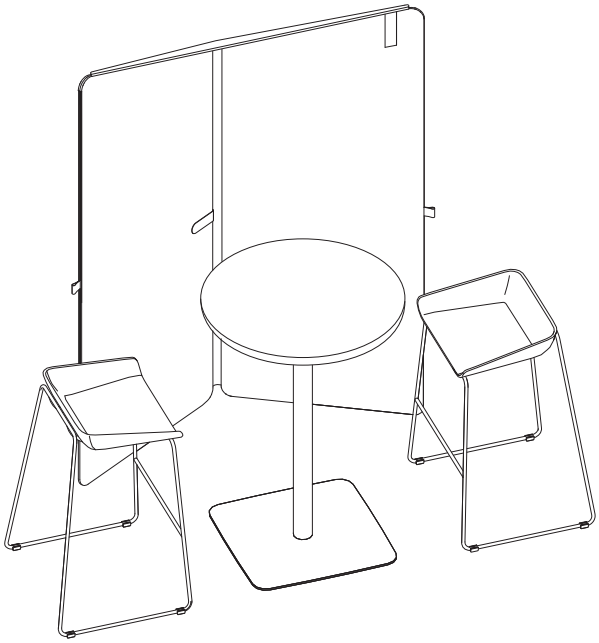

Quantity	Style Number	Description	Options	Page for Ordering
1	**TS6SCRN**	Clipper Screen	72"H	▶ See page 22
1	**TS4WRDCAFE**	Round Stand-Up Table	–	▶ See *Meeting Spaces Specification Guide*
2	**TS30702**	Scoop Stool with Upholstered Seat	–	▶ See *Seating Specification Guide*

Clipper

Clipper is a mobile, user deployable, freestanding screen that can easily transform work areas into inhabitable spaces that meet privacy needs. It has optional wings and comes in two heights.
▶ Specifying, page 22

Clipper ships fully assembled.

Wings are available as an option.

Magnets are used to secure the top of the screen to the side panels.

Clipper folds for easy transportation and storage.

Handles are constructed of nylon and are available in seven colors.

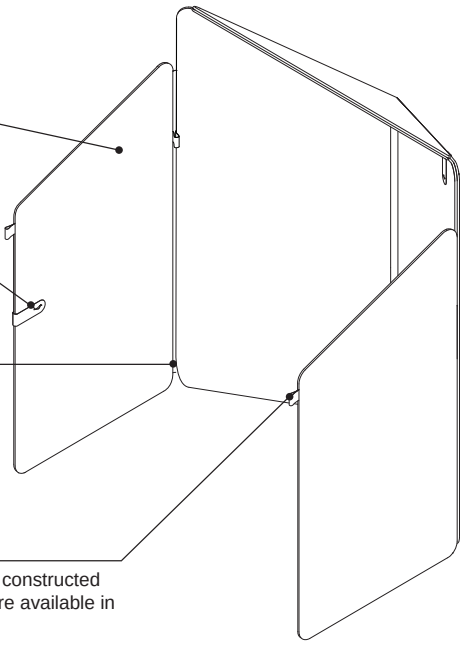

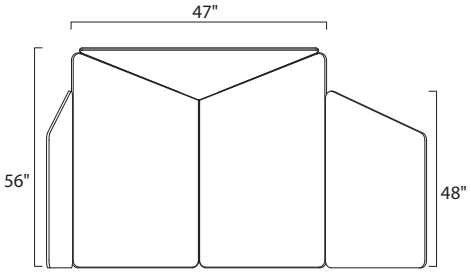

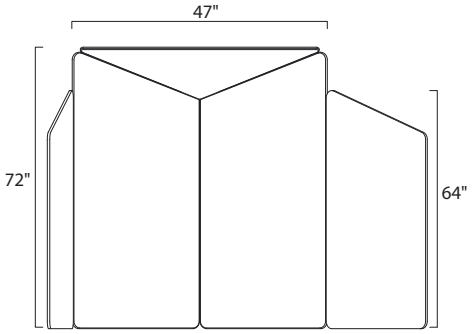

Actual Dimensions

	56" Base	Base Open	Wings	72" Base	Base Open	Wings
Depth	–	13"	–	–	13"	–
Width	26"	47"	26"	26"	47"	26"
Height	56"	56"	48"	72"	72"	64"

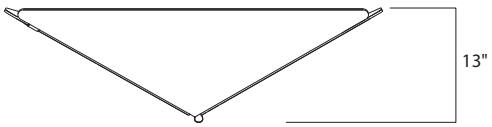

Product Details

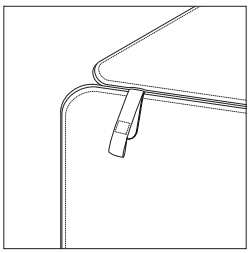

Align magnet when using product in deployed state.

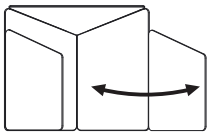

Wings should be folded outside when storing Clipper.

Surface Materials

Screen
- Fabric

Handle
- Nylon

Magnetic Clip
- Paint

▶ See Surface Materials on page 30 for specific availability.

Tip: Color scheme can have contrasting color as long as it is within the same fabric family. (For example, 5H16 Indigo specified on outside and 5H19 Cumulus specified on inside; both are Billiard Multi-Use by Designtex.)

Turnstone Pivot

Product Details

Thought Starters **10**

Pivot **11**

Specifying

Pivot **23**

Thought Starters

Pivot

Collaborative Lounge

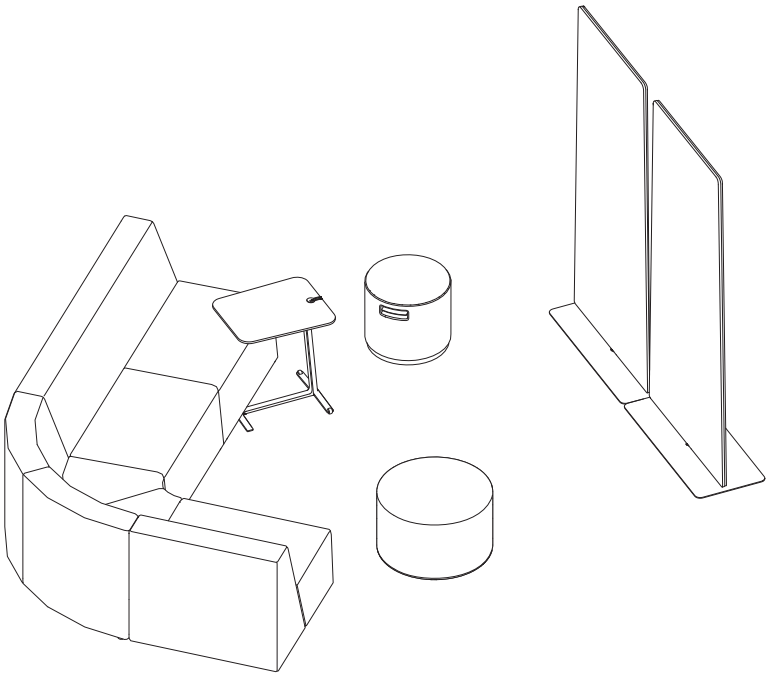

Quantity	Style Number	Description	Page for Ordering
2	**TS6PVT**	Pivot Screen	▶ See page 23
1	**TS3BCS**	Campfire Big Lounge – Seam	▶ See *Seating Specification Guide*
1	**TS3CRIN90S**	Campfire 90° Inside Corner Lounge	▶ See *Seating Specification Guide*
1	**TS3HLS**	Campfire Half Lounge – Seam	▶ See *Seating Specification Guide*
1	**TS4TST**	Campfire Skate Table	▶ See *Wood Casegoods Specification Guide*
1	**TSBUOY**	Buoy	▶ See *Seating Specification Guide*
1	**TS34401**	Campfire Ottoman	▶ See *Seating Specification Guide*

Pivot

Pivot is a multifaceted, freestanding screen designed to create boundary and functionality within collaborative spaces. You can rotate the screen, as well as write on the markerboard surface.
▶Specifying, page 23

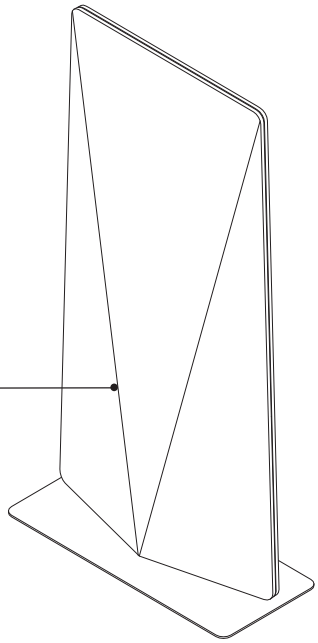

Upholstered side is available in three fabric families.

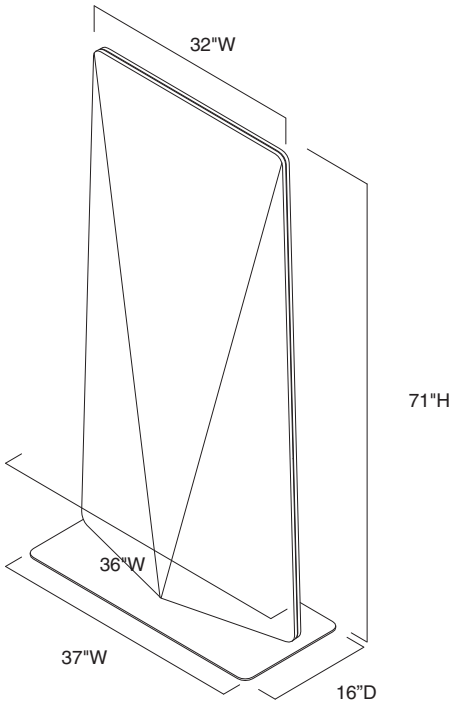

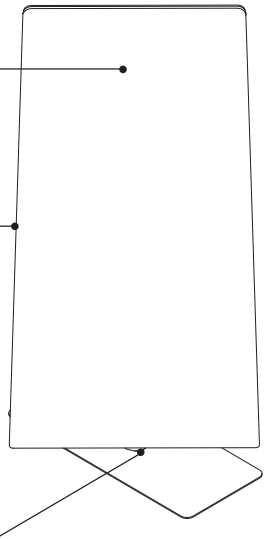

Markerboard laminate side comes standard on Pivot, providing a collaborative, writable surface.

Edge on markerboard side is exposed plywood.

Base rotates at 45° increments, available in two paint colors.

Product Details

Screen thickness is 1" depth at the top and 6" depth at the bottom.

Surface Materials

Upholstered Side

Price Group 1

- Buzz2

Price Group 3

- Billiard Multi-Use by Designtex

Select Surfaces

For information on products within Select Surfaces, including accent paints and fabrics from Designtex, Gabriel, Kvadrat, and Pollack, please refer to the Surface Materials Reference Manual or visit *www.steelcase.com/surface-materials* under the *Select Surfaces* section.

Base

Price Group 1

- 7241 Arctic White
- 7360 Merle

Steelcase Work Tents

Product Details

Boundary Tent 14
Table Tent 16
Pod Tent 18
Overhead Tent 20

Specifying

Boundary Tent 24
Table Tent 25
Pod Tent 26
Overhead Tent 27

Boundary Tent

Steelcase Work Tents Boundary Tent is a lightweight, freestanding, circular privacy screen. Boundary Tent provides visual privacy and shielding to a wide range of spaces. Perfect as an extra layer of privacy in shared, ancillary spaces, Boundary Tent provides just the right protection to feel safe and comfortable in the open office.

▶ Specifying, page 24

Connector button attaches screen to pole. The button allows the screen to be connected on either side or for two screens to be attached. Additional screen can be ordered through Service Parts **(1409321001SR)**.

Outer fabric matches 6059 Sterling Dark Solid plastic button on top of pole. The button easily connects screen to pole.

Screen is a single layer of fabric and visible from both sides. It is made of a primary (larger) and accent (smaller) fabric. Thread color coordinates with the primary fabric.

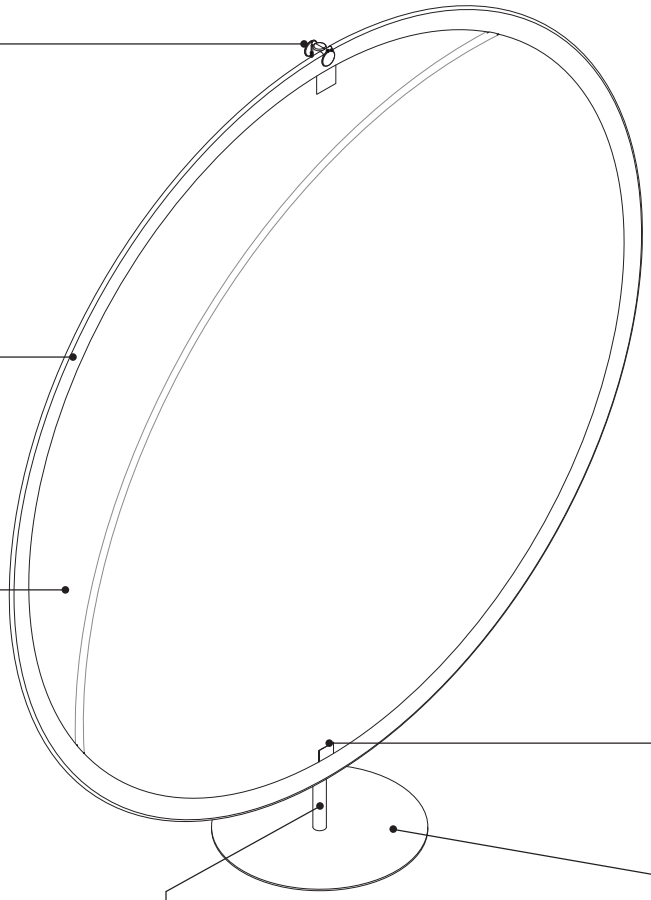

Pocket on bottom of screen holds a magnet to keep the screen snug to the pole.

Glides are standard on the base and not adjustable.

Pole and base are painted steel.

Dimensions

	Boundary Tent
Diameter of screen	54" or 66"
Height of pole	59" or 71"
Diameter of base	16"
Diameter of pole	1"

Steelcase
December 2022

Product Details

Screen is available in Ascent and Era fabrics. Ascent fabrics are user's choice. Era is available in predetermined palettes; warm, neutral, and cool.

- Warm
  - Primary: Era Pink Lemonade 5ER8
  - Accent: Era Scarlet 5ES0
- Neutral
  - Primary: Era Comet 5ER5
  - Accent: Era Night Owl 5ES7
- Cool
  - Primary: Era Royal Blue 5ES6
  - Accent: Era Night Owl 5ES7

Tip: User's choice is available to select any Era fabric for the primary and accent finishes as an option with an upcharge.

66" diameter screen always comes with the 71"H pole for full privacy.

54" diameter screen defaults to a 59"H pole, but is available with the 71"H pole for added visual interest.

Thread color coordinates with the primary (larger) screen fabric.

Boundary Tents weigh 11 pounds and 13 pounds respectively and are easily transportable.

Application Topics

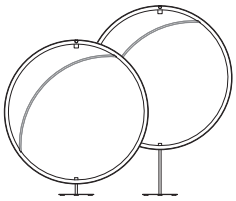

Smaller 54" diameter screen is available with a 59"H or 71"H pole.

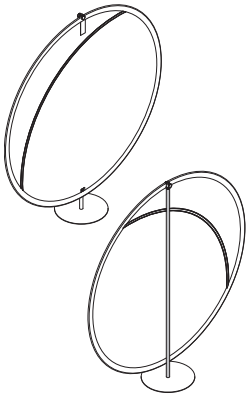

Pole is visible from one side of the screen.

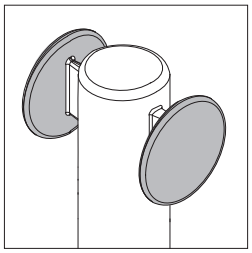

Connection button can accommodate two screens, if desired. Additional screen can be ordered through Service Parts **(1409321001SR)**.

Surface Materials

Fabric screen

- Ascent upholstery
- Era upholstery

Base and pole

- Paint

Connector button

- 6059 Sterling Dark Solid plastic

Table Tent

Steelcase Work Tents
Table Tent is a versatile and lightweight desk screen that provides visual privacy on many different tables, desks, and benches.
▶ Specifying, page 25

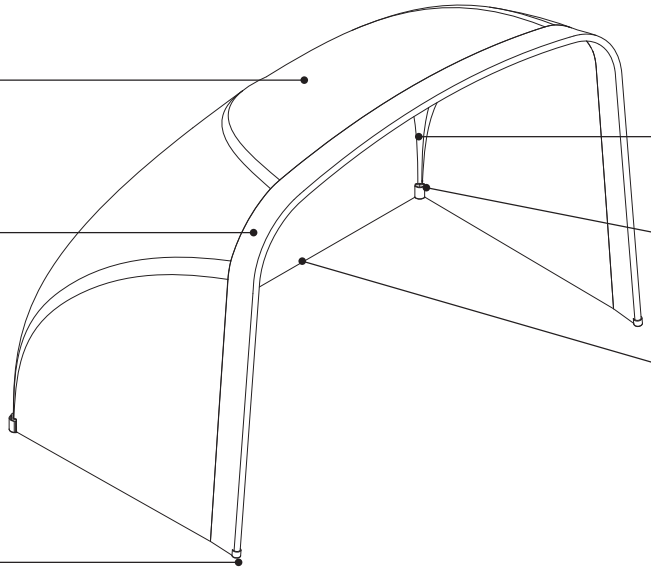

Ascent Arctic White TE04 is always applied to the top of the Table Tent to diffuse overhead lighting.

Outer fabric matches 6059 Sterling Dark Solid and provides housing for frame structure.

Rubber stop caps are included to provide added stability and to protect worksurfaces.

Fiberglass rods are exposed for easy set up and are available in white.

Reinforced pockets secure the fiberglass rods and maintain product shape.

Table Tent design and fabric allow for typical use of monitor arms and power access. Cords can be routed under fabric.

Dimensions

	41"W	53"W
Width at user edge	41"	53"
Depth	22½"	27"
Height	30"	33"

Product Details

Because fabric is held in tension to create product shape, fabric tension waves will appear.

Screen is available in the Ascent fabric family. The top panel is only available in TE04 Arctic White.

Thread color coordinates with primary screen fabric.

Table Tent is lightweight and is easy transportable and storable. Tapered width allows for multiple Table Tents to be nested.

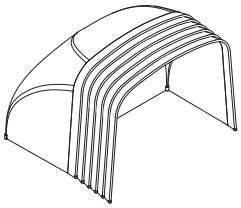

Table Tents are available in different packaging quantities: 1-pack, 2-pack, or 6-pack. Price per unit decreases with larger packaging quantities. All Table Tents in a package must be the same finish.

Table Tents nest when not in use for convenient storage.

Table Tent has no clips or physical connection to the table or desk on which it sits. This allows the fabric back edge to accommodate wires and cords as needed.

Table Tents are lightweight. The 41"W is approximately 3 pounds and the 53"W is approximately 4 pounds.

Surface Materials

Fabric screen
- Ascent upholstery

Fiberglass rods
- White

Application Topics

	Worksurfaces			Desks/Benches	
	Optimized	**Notes**	**Caution**	**Optimized**	**Notes**
41"W Table Tent	Nominal 24"D x 42"–48"W	Worksurfaces greater than 42"W will result in extra uncovered worksurface. *Tip: Not optimized for anything greater than 48"W.*	Does not work with worksurfaces less than 22½"D or 41"W.	• fixed seated height benches and desks • study carrels • communal tables • low-tech height-adjustable desks	• fixed standing height benches and desks might have user interference
53"W Table Tent	Nominal 30"D x 54"–60"W	Worksurfaces greater than 54"W will result in extra uncovered worksurface. *Tip: Not optimized for anything greater than 60"W.*	Does not work with worksurfaces less than 27"D or 53"W.	• Height-adjustable desks with most monitor arms • fixed seated height benches and desks	• fixed standing height benches and desks might have user interference

Pod Tent

Steelcase Work Tents
Pod Tent is a freestanding pod that provides individuals with shelter and privacy in the open office.
▶ Specifying, page 26

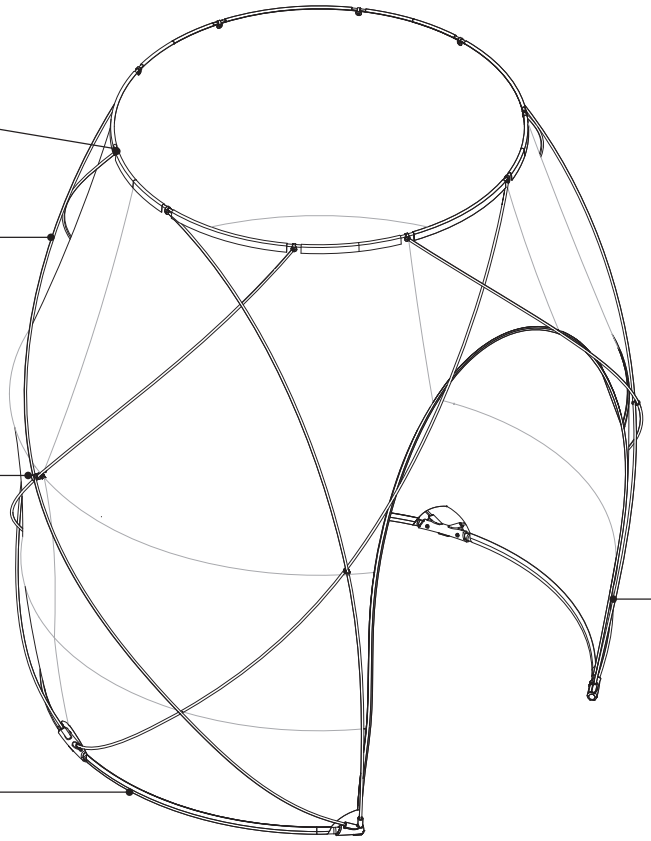

Fabric is connected to the frame with a hook and loop attachment at the top of the Pod Tent.

Aluminum pole sets provide the frame of the structure and are available in silver. The frame is external to the fabric.

Connectors hold fabric to frame.

Door trim matches the bottom Ascent fabric. If Ascent is not bottom fabric, the trim is light grey.

The base ring assembly consists of powder coated steel tubing and plastic base connectors, both available in platinum. Cutouts in the fabric around the connectors also allow for power routing and access.

Dimensions

	Pod Tent
Diameter at base	76"
Diameter at widest section	88"
Diameter at top opening	55¾"
Door opening height	~72"
Door opening width at floor	~43½"
Door opening at widest	~52"
Height	~92"

Tip: Dimension will vary based on fabric selection and inherent construction of the product.

Product Details

Fabric is held in tension to create product shape, fabric tension waves will appear.

Aluminum pole sets, fabric body, and hidden rod sets create the structure of the Pod Tent.

The open top allows for additional light in the Pod Tent.

Thread color coordinates with chosen fabric.

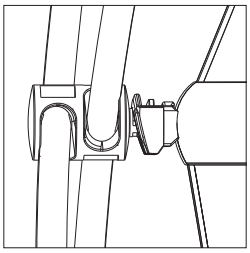

Connectors hold fabric to frame.

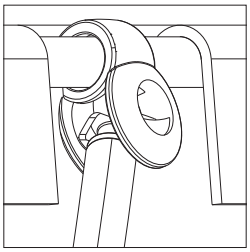

Connectors will connect vertical poles to top ring.

Metal base is freestanding and does not attach to the floor.

Pod Tent ships knocked own and ready to assemble.

Pod Tent weighs 25-28 pounds depending on upholstery chosen.

Use WTPTFAB for the Pod Tent fabric body when replacing the fabric to change the color of the Pod Tent and reusing your existing poles and structure.

Application Topics

Recommended for use in areas with high ceilings and ample circulation space. The height of the Pod Tent may interfere with suspended lights.

Transparent and lighter fabrics are recommended on the top half of the Pod Tent to allow the most natural light to filter inside.

Pod Tent is optimized for one user, with lounge or task furniture.

Pod Tent entry should be considered when planning adjacent settings and circulation paths.

Pod Tent can be ordered in all one color by specifying the same color for the top and bottom fabric selections.

Once installed, Pod Tent will settle and adjust for approximately 48 hours. The nature of tensile construction is such that some dimensions vary.

Surface Materials

Top half fabric
- Ascent
- Sheer

Bottom half fabric
- Ascent
- Era
- Sheer

Aluminum poles
- Silver

Overhead Tent

Steelcase Work Tents Overhead is a unique overhead privacy structure that provides shelter and space definition.
▶ Specifying, page 27

Overhead Tent is constructed of single layer fabric, aluminum poles, and two bases.

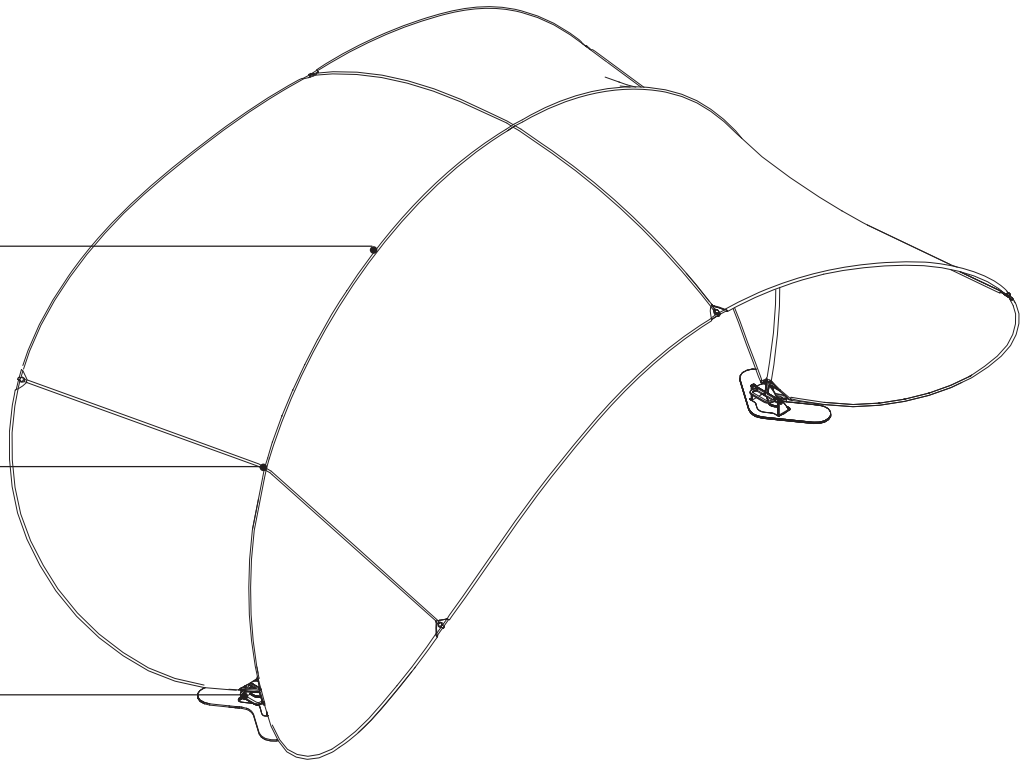

Poles are contained in a fabric sleeve, except at outside intersections where there is a fabric cutout. Inside intersections are visible from inside the Overhead Tent.

Aluminum poles are silver.

Base is comprised of a painted steel base and a plastic handle. Plastic handle is available in 6899 Platinum and painted steel is available in Steelcase paints.

Overhead Tent ships flat and requires no tools to assemble.

Dimensions

	Approximate Overall Width (inches)	Approximate Maximum Interior Height in Center (inches)	Approximate Maximum Exterior Height (inches)	Approximate Overall Depth (inches)
Width between bases				
9'	148"	93"	96"	99"
10'	156"	91"	96"	99"
11'	164"	89"	96"	99"
12'	174"	86"	96"	99"

Tip: With freestanding bases, Overhead Tent has adjustable width.
Tip: Dimensions when installed depends on width between bases and will vary due to tensile construction.

Product Details

Because fabric is held in tension to create product shape, fabric tension waves will appear.

Intersecting poles have translucent connectors and fabric cutouts.

The bases are on non-adjustable glides and have built in handles.

Overhead bases can be positioned from 9' to 12' apart. Optimum spacing is 9' to 10' apart. The Overhead Tent changes shape slightly depending on width.

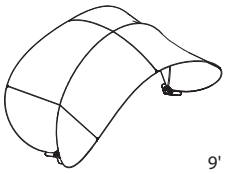

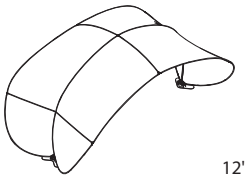

Dimensions when installed depends on width between bases and will vary due to tensil construction.

Application Topics

Overhead Tent can be used for lounge and seated task applications. Standing height applications are not recommended.

When positioned with a table underneath the Overhead Tent, it is recommended to have egress and circulation on both sides of the Overhead Tent. Table should not be greater than 48"D.

When assembling, optimal spacing between bases is 9' to 10' apart, however 9' to 12' is acceptable.

Sheer fabric meets Class A rating ASTME-84. Please check with the local authorities, especially building and fire inspectors, to determine code requirements associated with your intended application of this product.

Surface Materials

Fabric screen
- Sheer upholstery

Base
- Paint

Plastic handle
- Platinum plastic

Aluminum poles
- Silver

Connectors
- Translucent plastic

Cross connectors
- Platinum

Clipper

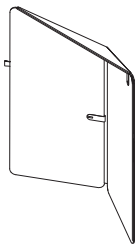

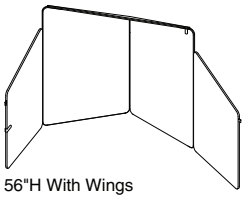

56"H With Wings

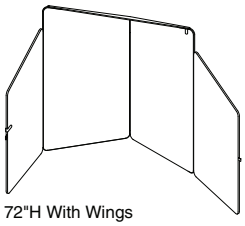

72"H With Wings

Tip: Screens are not intended to support additional weight.

Tip: Color scheme can have contrasting color as long as it is within the same fabric family. (For example, 5H16 specified on outside and 5H19 specified on inside; both are Billiard Multi-Use by Designtex.)

Standard Includes

- Inside of screen: fabric price group 01
- Outside of screen: fabric price group 01
- Glides: plastic
- Handle: nylon
- Joints: fabric, defaults to inside fabric and outside fabric selection
- Magnetic clips: paint price group 01
- Shipped fully assembled

Options

Height	56”	Price below
	72”	Price below
Screen Color Scheme	Non-Contrasting	No cost
	Contrasting	+$62
Inner Finish	Fabric Price Group 01	No cost
	Fabric Price Group 02	Prices below
	Fabric Price Group 03	Prices below
	Fabric Customer’s Own Material	+$55
Outer Finish	Fabric Price Group 01	No cost
	Fabric Price Group 02	Prices below
	Fabric Price Group 03	Prices below
	Fabric Customer’s Own Material	+$55
Handle Pull Finish	Nylon	No cost
Magnetic Clip Finish	Paint Price Group 01	No cost
	Paint Price Group 03	+$12
Wings	With Wings	56”H: +$1,417 72”H: +$1,463

Specification Information

Style Number		Base Prices	Options (Add $ to Base Price)							
			Inside of screen				Outside of screen			
			Fabric price group 2		Fabric price group 3		Fabric price group 2		Fabric price group 3	
			Without wings	With wings	Without wings	With wings	Without wings	With wings	Without wings	With wings
TS6SCRN	**56”H**	$2246	+$47	+$87	+$180	+$308	+$47	+$87	+$180	+$308
	72”H	$2343	+$83	+$94	+$286	+$334	+$83	+$94	+$286	+$334

Pivot

X 4/23

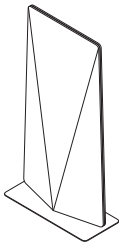

Standard Includes

- Side A: fabric price group 01
- Side B: markerboard laminate
- Base: paint price group 01
- Glides: hard, low profile glides

Options

Side A Finish	Fabric Price Group 01	No cost
	Fabric Price Group 03	+$277
Caster or Glide	Hard Glides	No cost

Specification Information

Dimensions			Style	Base
D	W	H	Number	Price
16”	37”	71”	**TS6PVT** X 4/23	$3170

X 4/23 = Last order entry
April 16, 2023

Steelcase Work Tents

Boundary Tent X 4/23

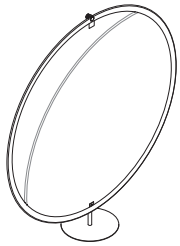

Tip: 66" diameter screen is only available with a 71"H pole.

Tip: The screen primary finish is the largest one. The accent finish is the smaller section on the upper portion of the screen.

Tip: Thread color coordinates with the primary (large) screen fabric.

Tip: Screen is available in predetermined Era palettes (see Understanding page). User's choice is available to select any Ascent or Era fabrics in the primary and accent locations.

Tip: When selecting user's choice, both the accent and primary fabrics need to be the same fabric family.

Standard Includes

- Steel pole and base: paint price group 01
- Connector button: 6059 Sterling Dark Solid
- Round screen with primary and accent upholstery
- Glides
- Screen comes ready to assemble

Options

Base Finish	Paint Price Group 01	No cost
	Paint Price Group 02	+$34
	Paint Price Group 03	+$72

Specification Information

Style Number	Dimension Screen Diameter	Base Prices Pole Height 59"	71"
Boundary Freestanding Screen - Ascent			
FSRS X4/23	54"	$646	$679
	66"	N.A.	$725

Style Number	Dimension Screen Diameter	Base Prices Pole Height 59"	71"	Options (Add $ to Base Price) Era Color Scheme: Cool, Neutral, or Warm	User's Choice
Boundary Freestanding Screen - Era					
FSRS X4/23	54"	$767	$800	No cost	+$168
	66"	N.A.	$888	No cost	+$169

X4/23 = Last order entry
April 16, 2023

Steelcase Work Tents

Table Tent

X 4/23

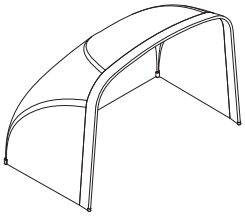

Tip: Thread color coordinates with Ascent finish selection.

Tip: Center top of Table Tent is always Ascent TE04 Arctic White.

Standard Includes

- Fabric: Ascent upholstery
- Fiberglass rods: white
- Screen comes ready to assemble

Options

Screen Finish Primary	Fabric Price Group A	No cost

Specification Information

Style Number	Prices Dimensions	
	41”W	**53”W**
One Pack		
WTDS1 X4/23	$586	$618
Two Pack		
WTDS2 X4/23	$936	$979
Six Pack		
WTDS6 X4/23	$2411	$2536

X4/23 = Last order entry
April 16, 2023

Steelcase Work Tents

Pod Tent

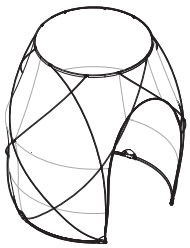

Tip: Aluminum poles will always be silver.

Tip: Base assembly will always be platinum.

Tip: To order a pod in one color, specify the same fabric for the bottom and top finishes.

Tip: Sheer is only available on the bottom if Sheer is selected on the top. Sheer can be on the top with any other fabric type on the bottom.

Standard Includes

- Fabric: Era, Ascent, or Sheer upholstery
- Tent poles: aluminum
- Pod tent comes ready to assemble

Options

Pole Finish	Silver	No cost
Color Scheme	Bicolor	No cost
Bottom Finish	Fabric Price Group A	No cost
	Fabric Price Group 01	+$462
Top Finish	Fabric Price Group A	No cost
	Fabric Price Group 01	+$330

Specification Information

Style Number	Base Price
Pod Tent	
WTPT	$3553

Steelcase Work Tents

Overhead Tent

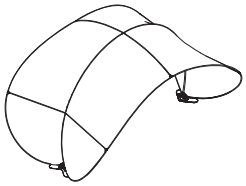

Tip: With freestanding bases, overhead tent has adjustable width.

Tip: Sheer fabric meets Class A rating ASTME-84. Please check with the local authorities, especially building and fire inspectors, to determine code requirements associated with your intended application of this product.

Standard Includes

- Tent: 9'-12' width
- Fabric: Sheer upholstery
- Tent poles: aluminum
- Two painted steel bases
- Overhead tent comes ready to assemble

Options

Base Finish	Paint Price Group 01	No cost
	Paint Price Group 02	+$34
	Paint Price Group 03	+$69

Specification Information

Style Number	Base Price
Overhead Tent	
WTOT	$2764

Steelcase Work Tents

Tent Fabric Bodies

Tip: **WTPTFAB** *is the fabric portion of the pod tent. Order to replace body on existing pod tent.*

Tip: Sheer is only available on the bottom if Sheer is selected on the top. Sheer can be on the top with any other fabric type on the bottom.

Standard Includes

- Fabric: Era, Ascent, or Sheer upholstery

Options

Color Scheme	Bicolor	No cost
Bottom Finish	Fabric Price Group A	No cost
	Fabric Price Group 01	+$462
Top Finish	Fabric Price Group A	No cost
	Fabric Price Group 01	+$330

Specification Information

Style Number	Base Price

Pod Tent Fabric Body

WTPTFAB	$1754

Tip: **WTOTFAB** *is the fabric portion of the overhead tent. Order to replace body on existing overhead tent.*

Tip: Sheer fabric meets Class A rating ASTME-84. Please check with the local authorities, especially building and fire inspectors, to determine code requirements associated with your intended application of this product.

Standard Includes

- Tent: 9’-12’ width
- Fabric: Sheer upholstery

Specification Information

Style Number	Price

Overhead Tent Fabric Body

WTOTFAB	$1206

Surface Materials

Clipper Surface Materials 30

Color Availability Matrix for Steelcase Work Tents 32

Understanding Customer's Own Material (COM) 34

Maintenance and Cleaning 36

Surface Materials

Clipper

Panel Fabric

Price Group 1

Buzz2

Price Group 2

Cogent: Connect
Stencil

Price Group 3

Billiard Multi-Use by Designtex

Select Surfaces

For information on products within Select Surfaces, including accent paints and fabrics from Designtex, Gabriel, Kvadrat, and Pollack, please refer to the Surface Materials Reference Manual or visit www.steelcase.com/surface-materials under the Select Surfaces section.

Custom Surfaces

Price Group COM (Customer's Own Material)

Fabric Approval and Yardage
To confirm whether a particular COM material has already been tested for use on a specific Steelcase product or to determine actual yardage requirements:
- Visit *www.steelcase.com*

For additional information regarding Customer's Own Material, call 1.888.STEELCASE.

Nylon

Applies to:
- Handle

5JG0 Black
5JG1 Burgundy
5JG2 Taupe
5JG3 Silver
5JG4 Teal
5JG5 Red
5JG6 Pacific Blue

Paint

Applies to:
- Magnetic clips

Price Group 1

7243 Seagull
7360 Merle

Price Group 3

Accent paint
Accent paints allow you to choose from a prematched color palette of trend driven colors. Refer to the *Surface Materials Reference Manual* for more information about accent paints.

Color Availability Matrix for Steelcase Work Tents

Legend

- • = Not available
- ■ = Available
- □ = Available with exceptions
- Ⓔ = Established

		Paint	**0835** Black	**4140** Arctic White Gloss	**4144** Black Gloss	**4242** Milk Smooth	**4710** Low Gloss Black	**4728** Nickel Metallic	**4743** Mineral Metallic	**4744** Pearl Metallic	**4750** Champagne Metallic	**4798** Sterling Metallic	**4799** Platinum Metallic	**4803** Near Black Metallic	**4990** Customiz Paint	**7207** Black	**7225** Sand Ⓔ	**7237** Slate	**7238** Fieldstone	**7239** Midnight	**7241** Arctic White	**7243** Seagull	**7245** Carbon Metallic	**7246** Midnight Metallic	**7250** Sterling Dark Solid	**7278** Dark Bronze	**7360** Merle	Accent Paints	Coatings	Lux Coatings
Boundary Tent	Base		■	■	■	■	■	■	■	■	■	■	■	■	■	■	■	■	■	■	■	■	■	■	■	■	■	■	■	■
	Screen		•	•	•	•	•	•	•	•	•	•	•	•	•	•	•	•	•	•	•	•	•	•	•	•	•	•	•	•
Pod Tent	Bottom		•	•	•	•	•	•	•	•	•	•	•	•	•	•	•	•	•	•	•	•	•	•	•	•	•	•	•	•
	Top		•	•	•	•	•	•	•	•	•	•	•	•	•	•	•	•	•	•	•	•	•	•	•	•	•	•	•	•
Table Tent	Screen		•	•	•	•	•	•	•	•	•	•	•	•	•	•	•	•	•	•	•	•	•	•	•	•	•	•	•	•
Overhead Tent	Base		■	■	■	■	■	■	■	■	■	■	■	■	■	■	■	■	■	■	■	■	■	■	■	■	■	■	■	■
	Screen		•	•	•	•	•	•	•	•	•	•	•	•	•	•	•	•	•	•	•	•	•	•	•	•	•	•	•	•

	Fabric Finish Group		
	Ascent	Era	Sheer
	•	•	•
	□	■	•
	■	■	□
	■	•	■
	■	•	•
	•	•	•
	•	•	■

Understanding Customer's Own Material (COM)

The Customer's Own Material (COM) program allows customers to select textiles that are not offered through the standard Surface Materials program for use on products.

The COM process consists of seven steps: COM webpage, Testing/Approval, Steelcase to Purchase Service, Pricing, Cutting Direction, Yardage Requirements, and the Purchase Orders.

COM Webpage

- COM webpage features application test results for all COM, Designtex Select Surfaces, Options Collection and Classics Collection fabrics. The webpage allows you to calculate yardage requirements for most seating and systems products.
- Access the COM webpage at: *www.steelcase.com*.
  1.888.STEELCASE (1.888.783.3522) or send an e-mail to lineone@steelcase.com.

Application Testing/Approval

- Confirm that the selected COM has been tested and approved for application on a specific product by checking the COM webpage at: *www.steelcase.com*.

COM Application Testing or "approved for application" means the COM fabric has been reviewed for manufacturability using the standard manufacturing techniques to achieve acceptable appearance per Steelcase quality standards.

COM fabric performance, including durability, pilling, color fastness, stretch, splitting, fraying, etc. is not tested by Steelcase. Therefore, COMs are not covered by the Steelcase Warranty. Each COM vendor is responsible for all warranty claims related to fabric performance.

Steelcase reserves the right to reject or reverse any COM approval that does not meet the manufacturing requirements in actual production. COM approval may be rejected or reversed because not all application testing is based on actual production conditions and because some materials vary in fabrication.

- If the COM is approved, you may continue the order process.
- If the COM has failed, you must reselect a fabric.
- If the COM is not listed, that means Steelcase has not tested that fabric on our products.
  Helpful hint: Seating vinyl and leather do not require testing. Customer's own leather is available on Jenny Lounge seating. Customer's own vinyl is available on all seating products that accept Steelcase standard vinyl.
- If your material has not been tested, then send yardage (4.5 yards for seating, 2 yards for vertical surfaces) and submit a completed COM Application Testing Request form to:
  Steelcase Inc.
  Attn: COM Testing
  Door 305
  4060 Eastern Avenue
  Grand Rapids, MI 49508
- To ensure rapid processing, please use the electronic COM Application Testing Request form found on the COM webpage under the "How To Test" tab **or** fax a copy of the COM Testing Request form from the *Surface Materials Reference Manual* to 616.698.4700. **All information on the form is required in order to complete testing. COM tests cannot be performed if information is incomplete. Contact your requested fabric vendor for any missing information.**
- Test results will be returned (by fax or e-mail) in four working days from receipt of fabric and completed form.

COM materials that are approved for application to panel systems might require UL approval after application test approval. UL approval does involve fees and extended lead times.

All vertical surface COMs tested and approved with a content of 100% polyester meet a minimum of class C/UL1286. If class A or B fire rating is indicated, a burn test must be performed. All vertical surface COMs with a blended fabric construction require a UL burn test. For further UL information, contact a COM Consultant at 616.475.2426.
Tip: Jenny Lounge and Campfire Lounge products have a relaxed appearance. With some COMs they may show soft comfort wrinkles upon use.

Steelcase to Purchase Service

The COM program also includes a service to purchase approved COM for our customers for use on products. Steelcase will facilitate the ordering, scheduling and shipment of COM directly from the suppliers. There are no additional charges for this service.

Steelcase is the only party that may purchase COM for all products.

In some instances, not all colors in a fabric family are approved. You will be informed of these instances before Steelcase purchases the fabric.

If for some reason the fabric must be ordered directly from the supplier, contact your Steelcase Solutions Fulfillment Team Representative for approval and instructions prior to purchase. The only time the customer can purchase fabric is for testing.

COM Pricing

- Confirm COM is tested and approved.
- Use the COM or COL (Customer's Own Leather) price group found under Surface Materials Options within each product spec guide.
- Calculate yardage required by using the COM Calculator found on the COM webpage at *www.steelcase.com*
  1.888.STEELCASE (1.888.783.3522) or send an e-mail to lineone@steelcase.com.
  Helpful tip: Fabric width, repeat and product quantity and style number are required in order to calculate yardage accurately.
- Add the cost of the fabric to the COM or COL price group.
- The cost of the COM will be shown as a separate line on the acknowledgement.

COM vendors require fabric purchases in half or full yard increments. Therefore, Steelcase will round all final yardage calculations to the half yard.

COL (Customer's Own Leather) is calculated by the square foot, but purchased in hide. The customer is responsible for purchasing the minimum hide requirement.

Base price of chair includes standard fabrics. Steelcase will not allow credit or deduct the cost of the standard fabric when a COM fabric is selected in its place.

Steelcase cannot be held responsible for costs incurred when a COM supplier ships a COM fabric that does not meet Steelcase application standards or for costs incurred for late deliveries when a COM supplier commits to shipping a COM fabric for manufacturing by a specific date and misses that date.

COM Warranty

Steelcase standard warranty does not apply to Designtex or any other COM vendor's fabric.

- Designtex and other COM suppliers are responsible for color consistency within commercial tolerances, abrasion resistance, UV stability, and resistance to soiling and perspiration. These fabrics or vinyls are subject to policies regarding appearance, behavior, and durability that have been established by the fabric supplier. The customer's remedy for a fabric defect is limited to the replacement of the fabric by the supplier. Durability, performance, and fabric defects of COM fabrics are not guaranteed by Steelcase.

Cutting Direction

SEATING:

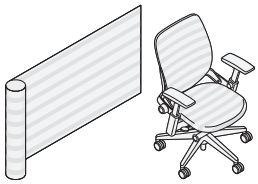

Warp horizontal

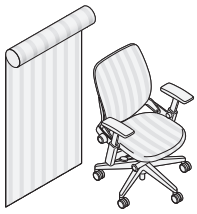

Warp vertical

- **Dealers must specify fabric application direction on all COM orders.**
- COMs for seating are most often applied in the warp vertical (downroll, woven way) direction. Some exceptions include patterns with stripes, fabrics that are sampled in the warp horizontal (railroad, across roll) direction, and solid vinyls.

▶See Cutting Direction Guidelines in the *Surface Materials Reference Manual* for more information.

VERTICAL SURFACES:

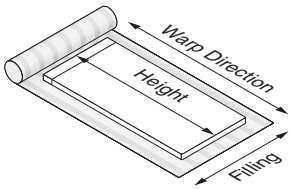

Warp vertical

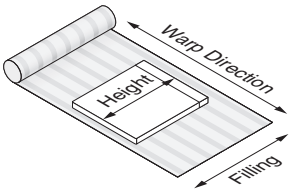

Warp horizontal

- **Dealers must specify fabric application direction on all COM orders.**
- The cutting direction of COMs on vertical surfaces varies by product and sometimes by style number. Please check the COM webpage for the approved cutting direction for your particular COM.

▶See Cutting Direction Guidelines in the *Surface Materials Reference Manual* for more information.

Steelcase cannot guarantee pattern repeat match from product to product. Steelcase also cannot guarantee pattern repeat match within each product listed. (i.e., seat and back, arms to back, etc.)

COM Yardage Requirements

- For the most accurate yardage requirements, visit the Calculator found on the COM webpage or call 1.888.STEELCASE (1.888.783.3522) or send an e-mail to lineone@steelcase.com.
- The Calculator on the COM webpage provides the same yardage requirements used by Steelcase purchasing.

Yardage requirements will change depending on:
–width of fabric
–fabric repeat
–cutting direction
–product style number
–quantity of products being manufactured

- COM vinyl requires upholstering in the railroad cutting direction. Please visit our webpage or call 1.888.STEELCASE (1.888.783.3522) or send an e-mail to lineone@steelcase.com for yardage requirements.
- Certain fabric treatments and backings require additional yardage or yardage minimums. Please contact the supplier for specific information.
- COM fabric vendors require fabric purchases in half- or full-yard increments, and the Steelcase COM calculator will automatically round all final yardage calculations to the half yard.
- Steelcase is the only party who may purchase COMs.

Maintenance and Cleaning

Inspecting and cleaning. Have your chair's upholstery, finishes, controls, base, and other moving parts inspected and cleaned at least once a year.

Cleaning painted and plastic surfaces. Finishes should be cleaned with water and/or a non-abrasive cleaner (such as Formula 409® and Fantastik®).

Maintaining upholstery. Use a vacuum cleaner for regular cleaning. Periodic professional dry cleaning is recommended. Do not steam clean.

Removing excess stains or heavy soil. Soak up excess stain with a cloth. Do not dry the stain completely or it may set. For most water-soluble stains (coffee, fruit juice, washable ink), use an upholstery cleaning solution (such as Bissell® upholstery shampoo or Guardsman Fabri-Kleen® products) and follow directions on package. For oil-borne stains, use a dry cleaning solution at room temperature (never hot) and let solution work into the stain. Use quick, light strokes to brush the stain with a soft bristle brush. Work from outside toward the center to prevent rings. Soak up remaining dry cleaning solution, then sponge the fabric with cool water. Let fabric dry completely; then vacuum thoroughly. If stain is still visible, repeat procedure. Several light applications of cleaning solution are more effective and less damaging than one heavy application.

Formula 409 is a registered trademark of Clorox company. Fantastik is a registered trademark of Dow Consumer Products, Inc. Fabri-Kleen is a registered trademark of Guardsman Chemical. All other marks are marks of their respective owners.

Resources

Style Number Index **38**

Style Number Index

Style Number	Page	Description
FSRS	24	Boundary Tent
TS6PVT	23	Pivot Screen
TS6SCRN	22	Clipper Screen
WTDS1	25	Table Tent
WTDS2	25	Table Tent
WTDS6	25	Table Tent
WTOT	27	Overhead Tent
WTOTFAB	28	Tent Fabric Bodies
WTPT	26	Pod Tent
WTPTFAB	28	Tent Fabric Bodies

Trademark List

® The following are registered trademarks for products of Steelcase Inc. or one of its related corporate entities: 4 o'clock, 900 Series, à la carte, Airtouch, Ally, Amia, Answer, Archipelago, Avenir, Ballet, Bix, Brayton International, Cachet, Canopy, Canto, Chancellor, Coalesse, Confidante, Context, Convene, CopyCam, Criterion, Crushed Can,Currency, dash, Designtex, Details, Detour, Drive, Elective Elements, Ellipse, Ember Chrome, Emerge, E-Table 2, FYI, Garland, Gentry, Ginkgo Biloba, Groupwork, Ideo, Jacket, Jenny, Jersey, Kart, Kick, LaCosta, Leap, LessThanFive, Let's B, LiveBack, Max-Stacker, media:scape, Metro, Migrations, Mitra, Montage, Nurture, Oriana, Parade, Pathways, PCT, Permiso, Player, Portal, Power Pincher, Progeny, Protégé, R2, Rally, Relevant, Reply, Rizzi Arc, Sensor, Series 9000, Siento, Sieste, Sine, Softcare, Springboard, Steelcase, Steelcase Design Partnership, Stella, Stow Davis, Swathmore, Sylvi, TeamWork, Technique, Texpress, Think, Thunder, Topo, Train, turnstone, Underline, Unison, Vecta, Viridian, Walden, Werndl, and X-Stack.

® The following registered trademarks are under license from AWI Licensing Company, Dover, DE: SoundScapes, DuraBrite, BioBlock, and Armstrong.

® The following registered trademarks are under license from Byrne Electrical, Rockford, MI: Interport, Mini-Port, Axil Z, and Ellora.

® The following is a registered trademark of DuPont, Wilmington, DE: Corian.

® The following is a registered trademark of Genlyte Thomas Company, Louisville, KY: Lightolier.

® The following is a registered trademark of Hilti Corporation, FL-9494 Schaan, Principality of Liechtenstein: Hilti.

® The following is a registered trademark of Leviton Manufacturing Company, Little Neck, NY: Decora.

® The following is a registered trademark of Mechanical Plastics Corp, Elmsford, NY: Toggler.

® The following is a registered trademark of Microsoft Corporation, Redmond, WA: Microsoft.

® The following are registered trademarks of Orangebox Ltd., Cardiff, UK: Orangebox.

® The following is a registered trademark of Panduit Corporation, Lockport, IL: Panduit.

® The following is a registered trademark of Trav (Press), Cuneo, Italy: Assisa.

® The following is a registered trademark of Virtual Ink, Boston, MA: mimioActive.

® The following registered trademarks are under license from Wilkhahn Furniture Products: Avera, Senzo, Versal, and Wilkhahn FS.

® The following are registered trademarks of Polyvision Corp: Flow, Motif, Polyvision, Sans, and Serif.

® The following is a registered trademark of Wilsonart International, Temple, TX: Chemsurf.

® The following is a registered trademark of Wiremold, West Hartford, CT: Wiremold.

® The following is a registered trademark of EMU Group S.P.A., Perugia, Italy: EMU.

® The following is a registered trademark of Security People, Inc.: Digilock.

® The following are registered trademarks of Natural Capital Partners Europe Limited: CarbonNeutral and the CarbonNeutral Certififed logo.

™ The following are trademarks for products of Steelcase Inc. or one of its related corporate entities: Access, Active/Passive Shelf, Ainsley, Akira, Alcove, Alerion, Alight, Amaris, American Elect, American Tradition, ap40, Arbor, Arriva, Asana, Ascot, Aspekt, Astor, Await, Bassline, B-Free, Bira, Bivi, Bixby, Bottomline, Brody, Brook, Buoy, Burton, c:scape, Calla, Calm, Camber, Campfire, Capa, Cappuccino, Cesar, Chester, Chord, Circa, Clarendon, Classic Rectangular, Clipper, cobi, Collaboration, Community, Company, Convey, Cortex, Coupe, Crea, Crew, Cura, Cypress, Davenport, Dearborn, Deck, Déjà, Denizen, Denska, Derby, DeskWizard, Divisio, Donovan, Dune, Duo, Echo, Edge, Elbrook, Elsna, Empath, Empress, Enea, ēno, EnSync, Enviro, Escapade, Everwall, Exchange, Exponents, Field, Flat Top, FlexFrame, Flip Top, Flute, Folio, FrameOne, FreeFlow, Frontier, Galilei, Gesture, Ginger, Ginkgo, Go Wall, Grip, Groove, Hatchback, Hawthorne, Hitch, Host Collection, Hosu, Huddleboard, i2i, Impact, Indy, InfoLink, IOS, I-Solve, Jack, Jarrah, Jetty, Juice, Kami, Kast, Kathryn, Lagunitas, Lark, L'Attitude, LearnLab, Leela, Lincoln, Linden, LiveSeat, Loria, Lyric, Malibu, Malibu Too, Mansfield, Marathon, Marien152, Martini, Mason, Masque, Migration, Millbrae, Mineral, Mingle, Mistic, Mistic Metal, Mistic Wood, Montara650, Montreal, MoreThanFive, Move, Nadia, Neighbor, nesso, Nickel, Nikko, Nod, Node, Norfolk, Ocular, Ology, Ontrak, Oom, Opus, Orchid, Outlook Collection, Ovation, Paloma, Paperflo, Parliament, Pasio, Passerelle, Patriarch, Payback, Peek, Pile File, Pisa, Pool, Potrero415, PUCK, QiVi, Quba, Rave, Reed, Regard, Relay, Reunion, Ripple, Riser, Roam, Rocco, Rocky, RoomWizard, Runner, Satellite, Sawyer, ScapeSeries, Senti, Sentinel, Senza, Sequoia, Session, ShareLink, Shield, Shortcut, Sidewalk, SILQ, Skylar, Slumber, Smoke, Snug, Soft Leaf, Sonata, Sorrel, SOTO, Southside, Stationkits, Steelcase Karman, Steelcase Series, Stiletto, Surprise!, Surround, Switch, Symphony, Sync, TagWizard, Tava, TeamStudio, TeamTheater, Tenaro, Tenor, Terrazzo, Theorem, Thread, Topaz, Touchdown, Tour, Tower Too, Trees, Trillium, Trolly, tX2, U-Free, Umami, Underscore, Uno, V.I.A., Verb, Verge, Verlay, Victor2, Visalia, Waldorf, Woodruff, Workspring, and X-tenz.

™ The following is a trademark of Microsoft Corporation, Redmond, WA: Windows.

™ The following is a trademark of Rodman Industries, Inc., Oconomowoc, WI: ResinCore1.

™ The following is a trademark of Ultrafabrics, LLC, Elmsford, NY: Ultraleather.

™ The following trademarks are under license from Wilkhahn Furniture products: Cana, Linus, Logon, Picto, Range, Stitz, Thema, Timetable, and Tubis.

™ The following is a trademark of Cradle to Cradle Products Innovation Institute, Oakland, CA: Cradle to Cradle Certified.

™ The following trademarks are under license from Walter Knoll: Andoo, Bob, Lazlo, Lox, Ribbon, and Together.

™ The following trademarks are under license from PP Møbler: Bar and Flag Halyard.

™ The following trademarks are under license from Carl Hansen: Elbow, Paddle, Shell, Wing, and Wishbone.

™ The following trademarks are under license from Cambridge Sound Management, LLC, Cambridge, MA: QtPro Soundmasking, Qt Quiet Technology, and Sonet Qt.

™ The following is a trademark of Electri-Cable Assemblies, Shelton, CT: Interact.

™ The following is a trademark of Clestra Hauserman: IRYS.

™ The following is a trademark of Wiesner-Hager Möbel GmbH: Nooi.

™ The following are trademarks of Polyvision: Accord, a^3, e^3, Boundri, and Nota.

™ The following is a trademark of Bostock Company, Inc: SnapCab.

™ The following is a trademark of Williams-Sonoma, Inc: West Elm.

™ The following is a trademark of Elena Marquina Testor: nanimarquina.

™ The following is a trademark of Forbo International SA: Forbo.

™ The following are trademarks of Orangebox Ltd., Cardiff, UK: Air^3, Aspect, Avi, Away from the Desk, Border, Campers & Dens, Coppice, Cubb, Kirn, On the QT, Ramsey, Skomer, Sully, Track-B, and Vale.

™/® The following are trademarks or registered trademarks of AMQ Solutions, LLC: AMQ, AMQ logo, KINEX, ILINE, ACTIV, AMOBI, CONCUR, 3F, REVI, S-SERIES, JAKU, SIYA, ZILO, BODI, FL-X, TIZU, EMBANK, TEKTIS and BIXBY.

™/® The following are trademarks or registered trademarks of Viccarbe Habitat, S.L.: Holy Day, Last Minute, Wrapp, Foro, Kelly, Noha, Viable, Solar, Sistema, Savina, Designed In The Sun, Cambio, Aleta, Viccarbe (logo), Viccarbe.

Trademarks used here in are the property of Steelcase Inc. or of their respective owners.