Steelcase®

Reply Pneumatic Cylinder Replacement

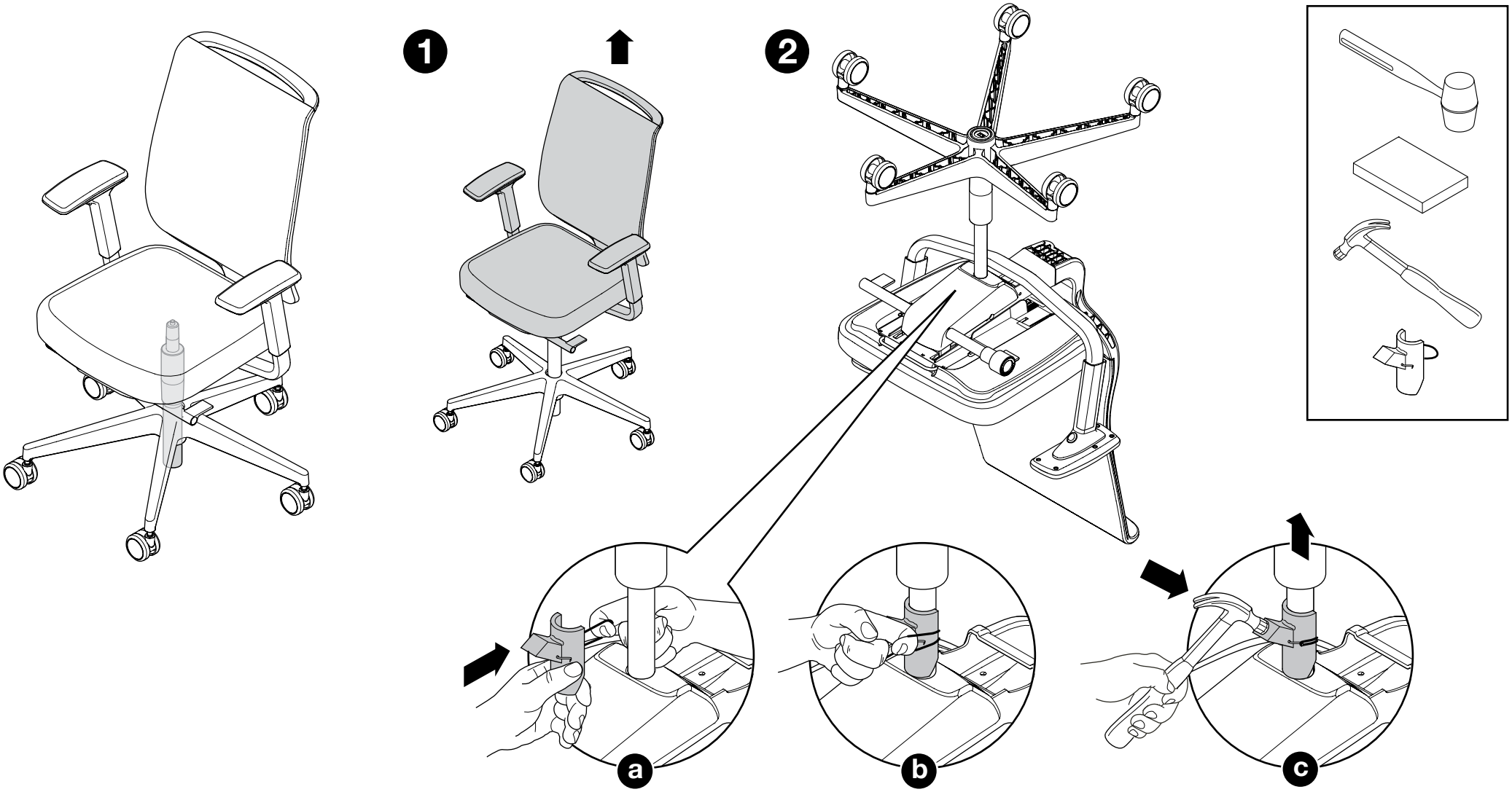

Steelcase®
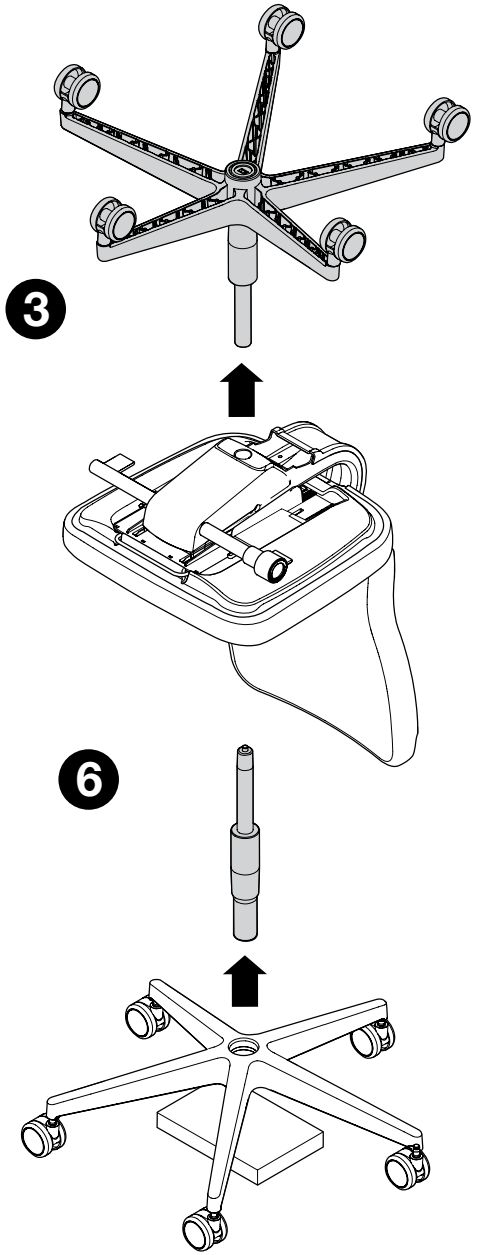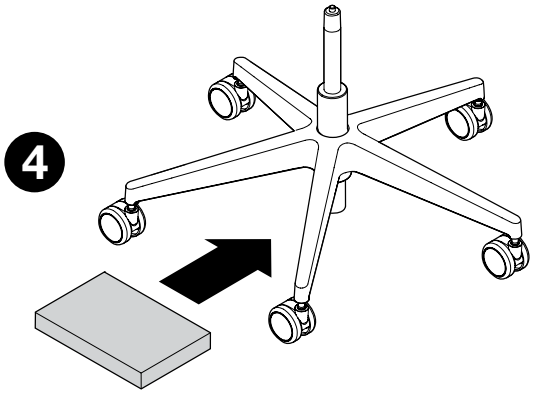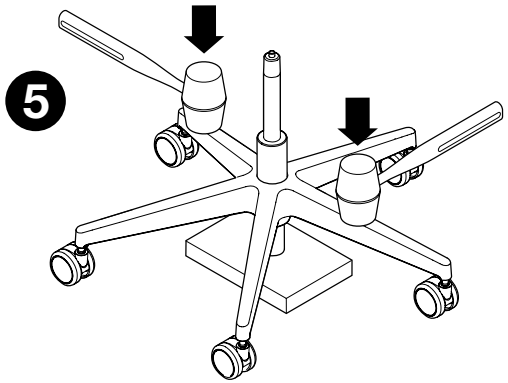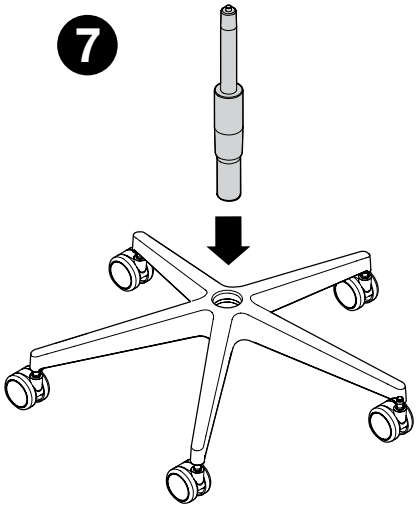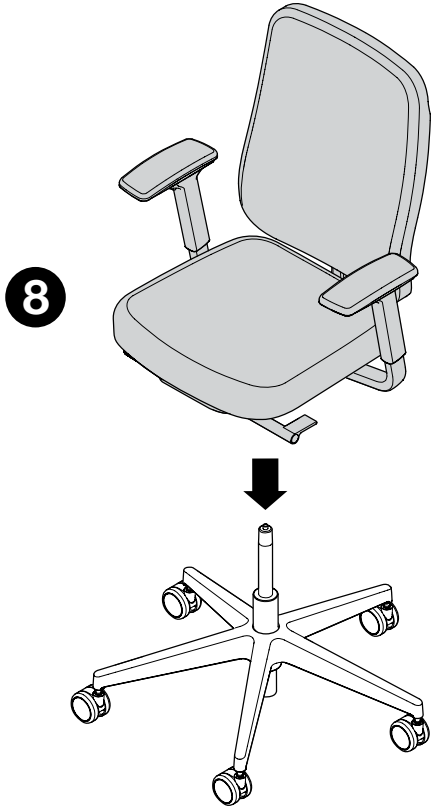
Reply Pneumatic Cylinder Replacement